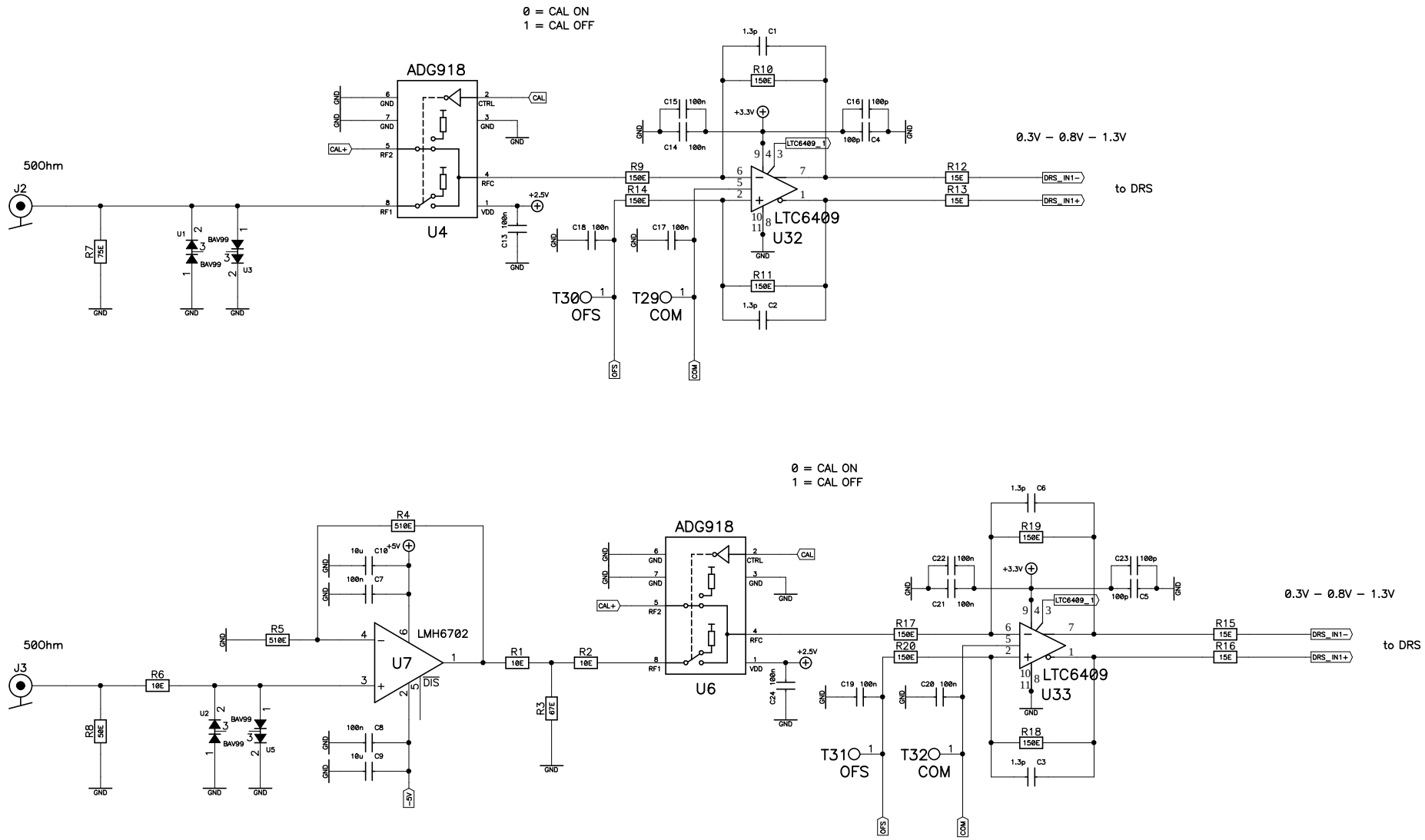

DRS4 front end DC

Paul Scherrer Institut
Department TEM
Lab for Electronics (1414)
5232 Villigen PSI

INPUT SMA

Rev 0

Date Dec 2011

Drawn by HU32/BM32

Filename DRS4_ Evaluation_ Board_ V324_ DC.sch

Sheet 1 of 1